Pressure Relief Valves

The Right Connection®

Application
- Suitable for liquids

Features
- Valve opens when the set pressure is reached
- Valve body made from solid bar
- Patented squeeze clamp
- Various pressure ranges
- Surfaces:
  - wetted product surfaces: 32Ra, other surface finishes available
- Standard connections:
  - clamp, others on request

Materials
- Product contact: 316L
- Non product contact: 304
- Product contact O-ring: EPDM or FKM

Specifications
- Temperatures:
  - maximum standard operating temperature: **266°F (130°C)**
  - sterilization temperature: **300°F (138°C)** (maximum 20 min)

Size Tube O.D.	Part #	Body Style	End	Seat(*)	Spring Set Range	Actuation
1/2"	SPR-TC1A150	T-Body	Clamp	V = FKM E = EPDM	**10-49 PSI**	Manual
	SPR-TC2A150				**50-99 PSI**	
	SPR-TC3A150				**100-300 PSI**	
	SPR-LC1A150	L-Body			**10-49 PSI**	
	SPR-LC2A150				**50-99 PSI**	
	SPR-LC3A150				**100-300 PSI**	
2"	SPR-TC1A200	T-Body			**10-49 PSI**	
	SPR-TC2A200				**50-99 PSI**	
	SPR-TC3A200				**100-300 PSI**	
	SPR-LC1A200	L-Body			**10-49 PSI**	
	SPR-LC2A200				**50-99 PSI**	
	SPR-LC3A200				**100-300 PSI**	

Dixon Sanitary

N25 W23040 Paul Road
Pewaukee, WI 53072
ph: 800.789.1718
fx: 800.789.4046
dixonvalve.com

The Right Connection®

Bill of Materials and Dimensional Information

Number	Part	Qty.	Material
1	L-body	1	316L
1A	T-body	1	316L
2	seat seal	1	FKM/ EPDM
3	stem	1	316L
4	washer	1	304
5	body gasket	1	FKM/ EPDM
6	stem holder	1	316L
7	stem O-ring	1	FKM/ EPDM
8	adapter	1	304
9	locking nut	1	304
10	spring	1	316L
11	top cap	1	304
12	adjustable cap	1	304
13	clamp	1	304

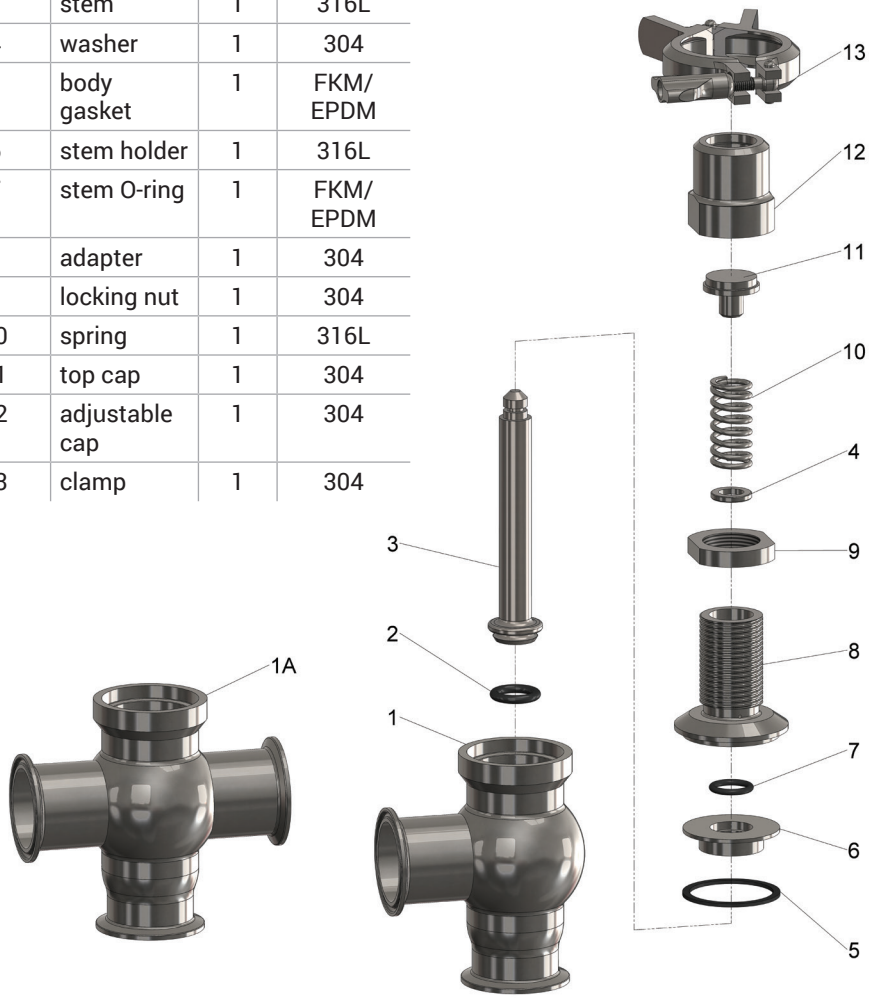

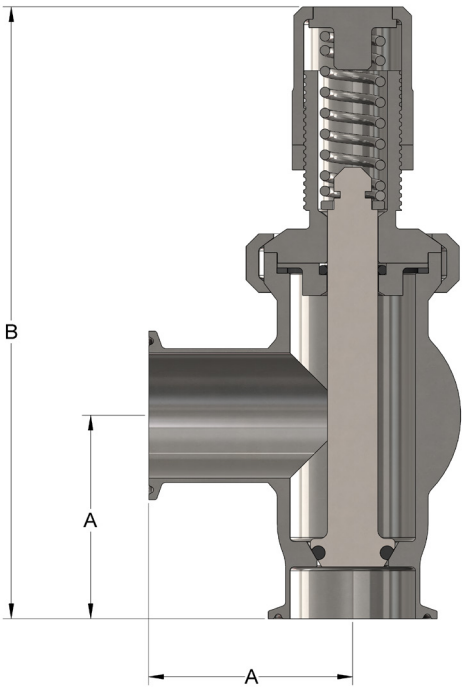

Dimensions

Size	A (in)	B Maximum (in)
1-1/2"	2.69	9.18
2"	3.04	9.84

© 2022 DVCC • DSSPR_622